Partition
System 2000_Nature

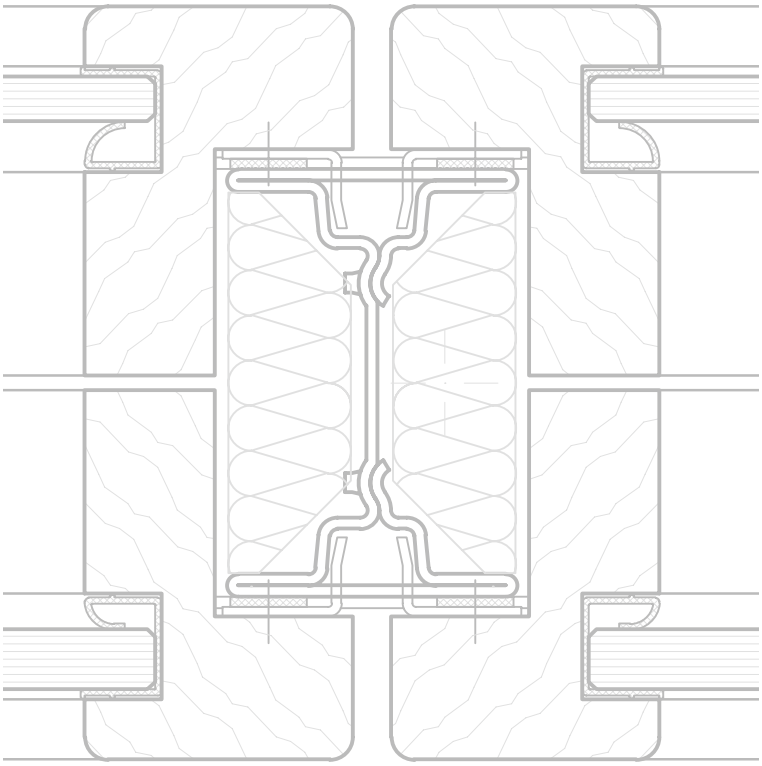

Strähle
Raum-Systeme

System 2000_Nature

Fully glazed wall system
100 mm wall thickness

The flush-mounted glass partition wall with an elegant timber frame construction significantly increases the proportion of renewable materials in the partition system. System 2000_Nature not only integrates perfectly into timber buildings from a design perspective, but also generally supports interior concepts aimed at creating a warm, homely atmosphere.

As the name suggests, the new partition wall is based on System 2000, the classic among Strähle partition walls. Here too, the basic structure is formed by the Strähle steel system stud. The timber frames consist of a solid wood profile that is veneered.

The modular design ensures that System 2000_Nature can be adapted at any time to new requirements in the simplest and most economical way, and is inherently suitable for circular use. The structurally identical design also allows it to be combined with solid wall elements from System 2000. The timber-framed glazing provides a high level of sound insulation of up to RwP 52 dB. To match the new wall system, two timber-framed doors with a high glass proportion were developed, with installation depths of 40 mm and 100 mm. As standard, the system is available in oak veneer or white fir veneer with white pigmentation. Additional veneer finishes can be implemented on a project-specific basis, offering a wide range of design possibilities.

Design
Fully glazed wall system
Finish
Front-flush wooden frame glazing
Element types
Fully glazed, toplight, balustrade, solid wall
Surface
Wooden frame with real wood veneer (standard oak)
Glass wall (toughened safety glass / acoustic laminated glass and insulating glass)
Solid wall (melamine, veneered, HPL or laquered)
Wall thickness
100 mm
Visible width
Vertical, bottom 35 mm, top 50 mm
Sound insulation
Glass wall: Rwp 51 dB
Solid wall: Rwp 53 dB
Fire prevention
Glass wall: F0
Solid wall: F30/F90
Accessories
Acoustics absorbers, blinds, climate control elements, accessory systems







Double glazing

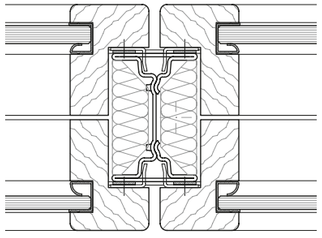

Glass element modular grid joint

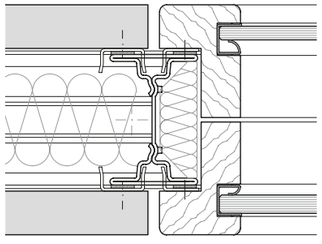

Solid wall modular grid joint

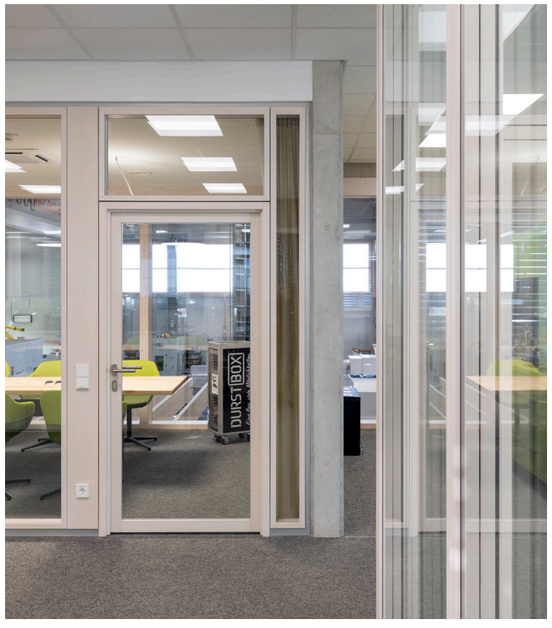





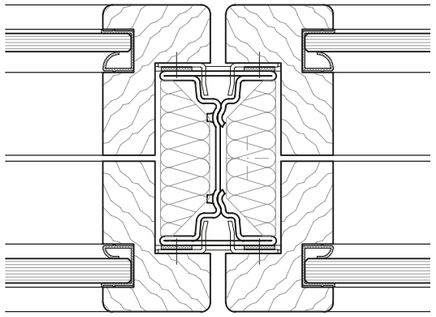

Glass element modular grid joint

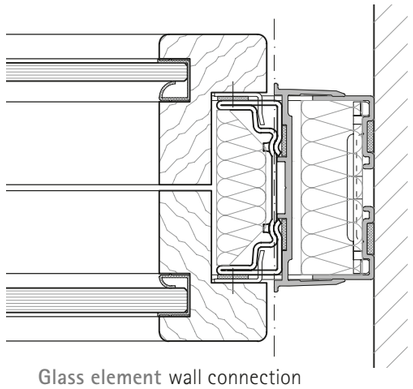

Glass element wall connection

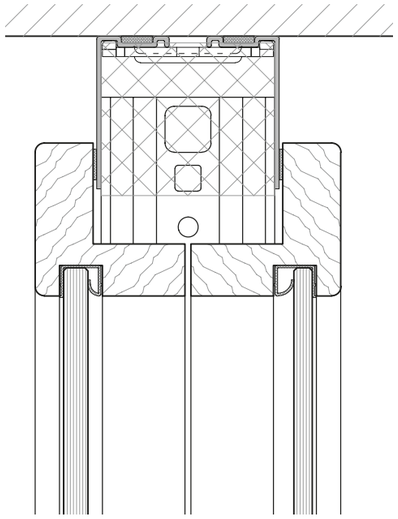

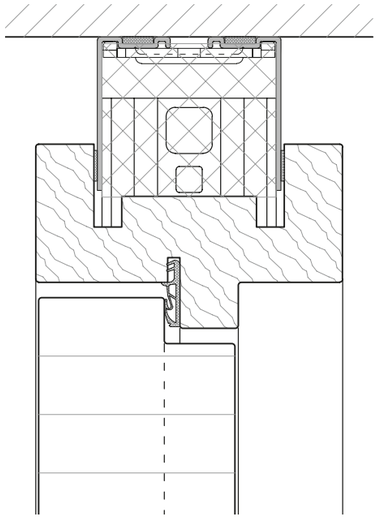

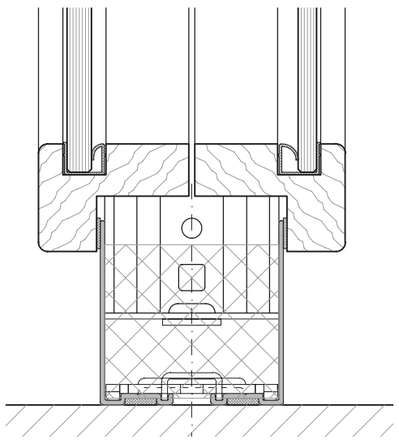

Glass element ceiling and floor connection

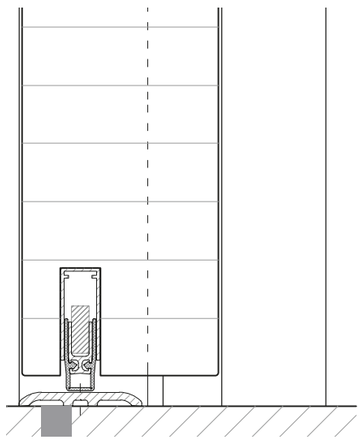

Door element ceiling and floor connection

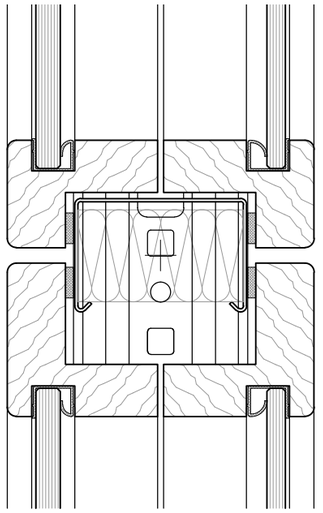

Glass element Cross joint with Trim, 35–50 mm

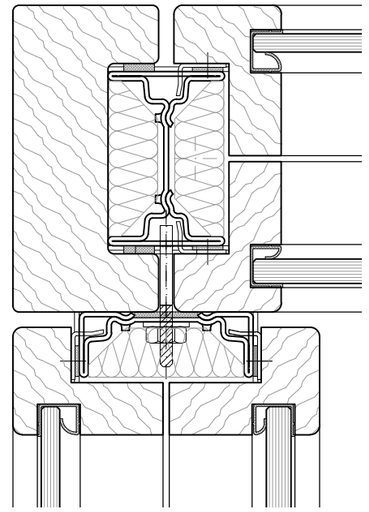

Glass element 90° corner point with wooden frame, 47.5 mm

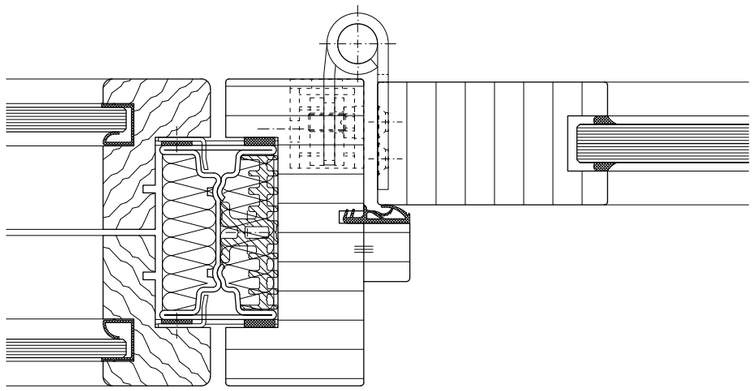

Door element HR40 hinge side

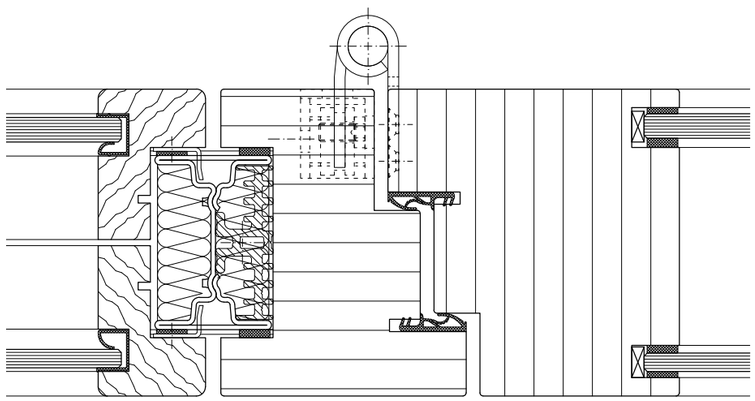

Door element HR100 hinge side

Partition wall	
Construction	Modular and flexible partition wall system of shell construction with system uprights. Cladding panels and glazing are mounted directly into the system uprights, forming a structural and building-physics unit. High-quality timber frames and door leaf variants complete the system.
Wall thickness	100 mm
Grid / module spacing	Dimensions as required and in accordance with structural approvals; max. module width 1350 mm.
Heights	Freely selectable up to 3 m height without horizontal joint, up to 4 m with horizontal joint.
Substructure	System uprights, powder-coated RAL 7016 matt, with integrated suspension system as standard for organizational accessories.
Connection profiles	Aluminium profiles recessed 20 mm from the wall plane.
Tolerance compensation	Solid wall: +/-15 mm, glazed wall: +/-10 mm; telescopic connection with higher tolerance compensation available.
Floor connection	80 mm, 50 mm standard referenced to installation plane; intermediate dimensions possible.
Ceiling connection	35 mm and 50 mm standard; other dimensions and telescopic connections available.
Finishes	• Timber frames, timber door frames, timber framed doors: oak veneer or white fir veneer (with white pigmentation); additional veneers optionally available upon request. • Standard connection profiles: anodized aluminium E6EV1, RAL 9016, RAL 7016; optionally powder-coated / anodized as required. • Melamine-coated wood-based panels, white similar to RAL 9016, light grey similar to RAL 7035. • Wood-based panels veneered, lacquered, or fabric-covered. • Metal cladding panels powder-coated or fabric-covered.
Glazing	Flush glazing or center glazing made of ESG / VSG safety glass with glazing profiles of solid timber carrier material. Available as full-height glazing, parapet glazing, or transom glazing.
Structural stability	Proof of structural stability for installation areas I and II.
Installation	• Vertical and horizontal cabling within the wall system. • Switches, sockets, and control elements can be integrated into solid walls / door side panels.
Accessories	
Absorber elements	Highly absorbent and sound-insulating partition absorbers can be integrated flush with the surface, available as metal or wood-based cassettes, perforation according to the Strähle collection.
Wall organization	Vertical wall organization integrated as standard (system joint).
Blinds	Electrically or manually operated blinds can be integrated.
Flow duct	Strähle Flow duct ÜS 60 can be integrated into door side panels, top panels, and solid wall elements.
Door elements	
Frames	System timber frames (wood-based composite construction) with high-quality 3D hinges suitable for various door variants; portal doors with concealed frame as well as dummy frames according to the Strähle collection.
Door leaves	Solid doors: 41, 64, 78 und 100 mm door leaves Timber framed door: 40,64 und 100 mm Structural Glazing door: 100 mm Full glass door: 10 mm ESG
Door handles	Commercial-grade door handles.
Hardware	Three-part adjustable hinges, stainless steel, door handles according to collection.

Wall Element	Construction / Description	Wall Element F0 100 mm Sound Insulation $R_{w,P}$
Solid wall	2x 19 mm melamine-faced chipboard	45 dB
	Additional 1x internal gypsum board weighting layer	49 dB
	Additional 2x internal gypsum board weighting layer	53 dB
	A-material metal cladding with 2x gypsum board	52 dB
Flush glazing	ESG/Float 5 + 6 mm	42 dB
	ESG/Float 6 + 8 mm	47 dB
	ESG/Float 6 + VSG-Si 8 mm	49 dB
	ESG/Float 8 + VSG-Si 8 mm	51 dB
	VSG-Si 8 + VSG-Si 8 mm	52 dB

Door element	Construction / Description	Door Element F0 100 mm Sound Insulation $R_{w,P}$	Double-leaf Version
Solid door	VT 41 solid door leaf 41 mm	32 dB	
	VT 41 acoustic door leaf 41 mm	37 dB	
	VT 64 solid door leaf 64 mm	37 dB	x
	VT100AR acoustic door leaf 100 mm in double rebate frame	42/47 dB	
	VT100AR Schalldämmtürblatt 100 mm in Doppelfalzzarge	42/47 dB	x
Timber framed door	HR40 timber framed door 40 mm – 8 mm ESG	32 dB	
	HR40 timber framed door 40 mm – 12 mm laminated acoustic safety glass	37 dB	
	HR100 timber framed door 100 mm, 6 mm ESG / 8 mm ESG	42 dB	
	HR100 timber framed door 100mm 6mm ESG / 8mm VSG	44 dB	
Full glass door	GG 10 full glass door 10 mm ESG	32 dB	
	GG 12 full glass door 12 mm VSG made of ESG	37 dB	
Structural Glazing Tür	SG 100 Structural Glazing door 100 mm 6 / 8 mm ESG	42 dB	x

Strähle Raum-Systeme GmbH
www.straehle.de
info@straehle.de

Gewerbestraße 6
71332 Waiblingen
T +49 7151 1714-0

Wurzelweg 5
14822 Borkheide
T +49 33845 66-0

Austria
Industriestraße 9
2353 Guntramsdorf
T +43 2236 23232-0

Switzerland
Dellenbodenweg 1
4452 Itingen
T +41 61 463 1332

UNITED KINGDOM PARTNER
Savile Row Projects Ltd
108-114 Golden Lane
EC1Y OTG London
M +44 (0) 7813 652015

All data without guarantee. Technical details are subject to modifications. SRS-System 2000Nature-042026-E

Strähle
Raum-Systeme